# SDN-enabled OF@TEIN Testbed

October 29th, 2012

APII WS @ Tokyo, Japan

Dr. JongWon Kim

(jongwon@gist.ac.kr)

Networked Computing Systems Lab.,
School of Information and Communications, GIST

# Toward Balanced Service Composition based on Programmable (*and Virtualized*) Resources

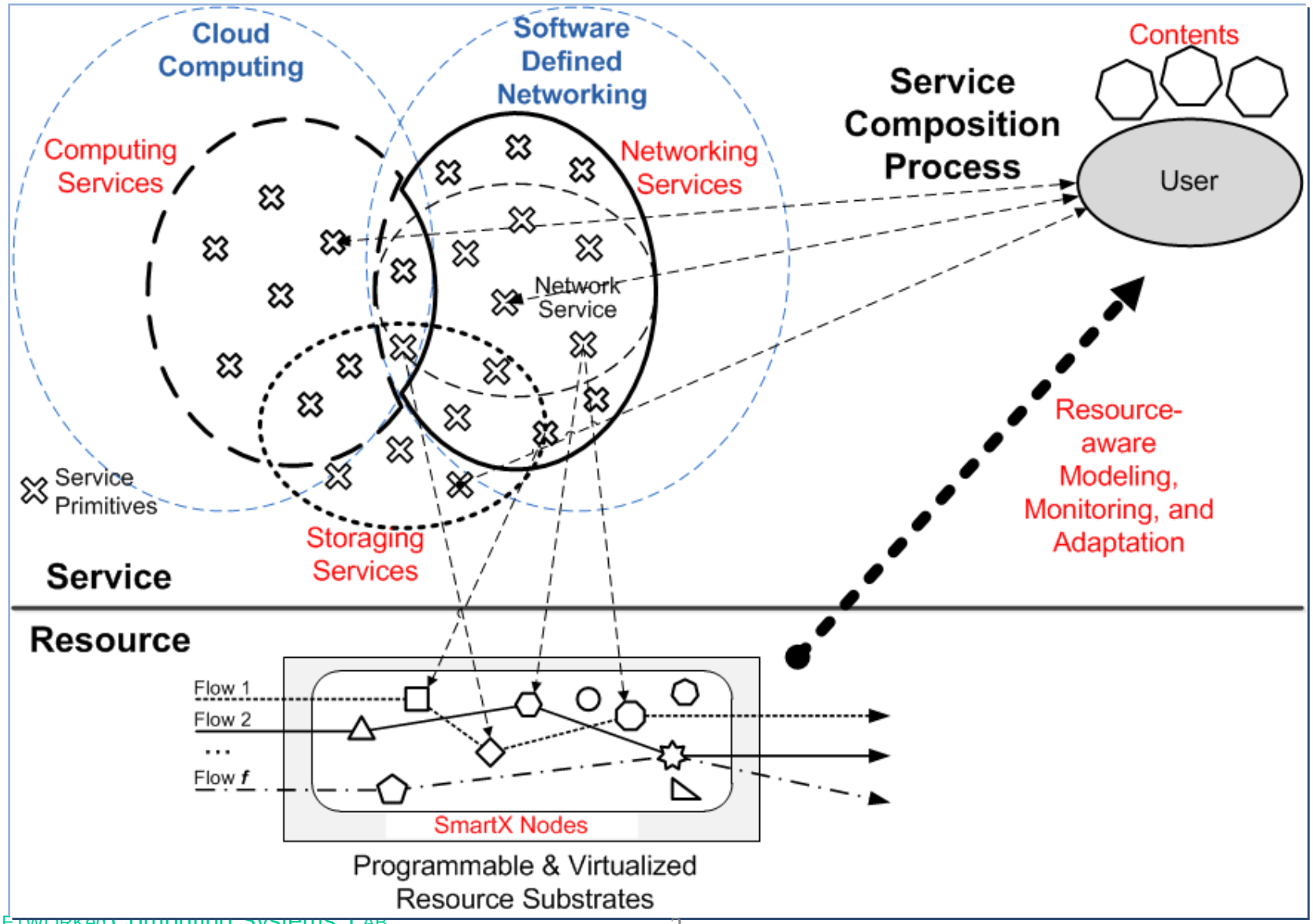

⇔ Contents

Resources ⇔ Flows ⇔ Services

(in Hosts, i.e., Smart Devices)

(Computing/ Networking)

Linking Resources contained in Hosts with Flows (tied with Services) to Share Contents

# OpenFlow
# &
# Software-Defined Networking
# (SDN)

# Open Networking Foundation (ONF)

http://opennetworkingfoundation.org

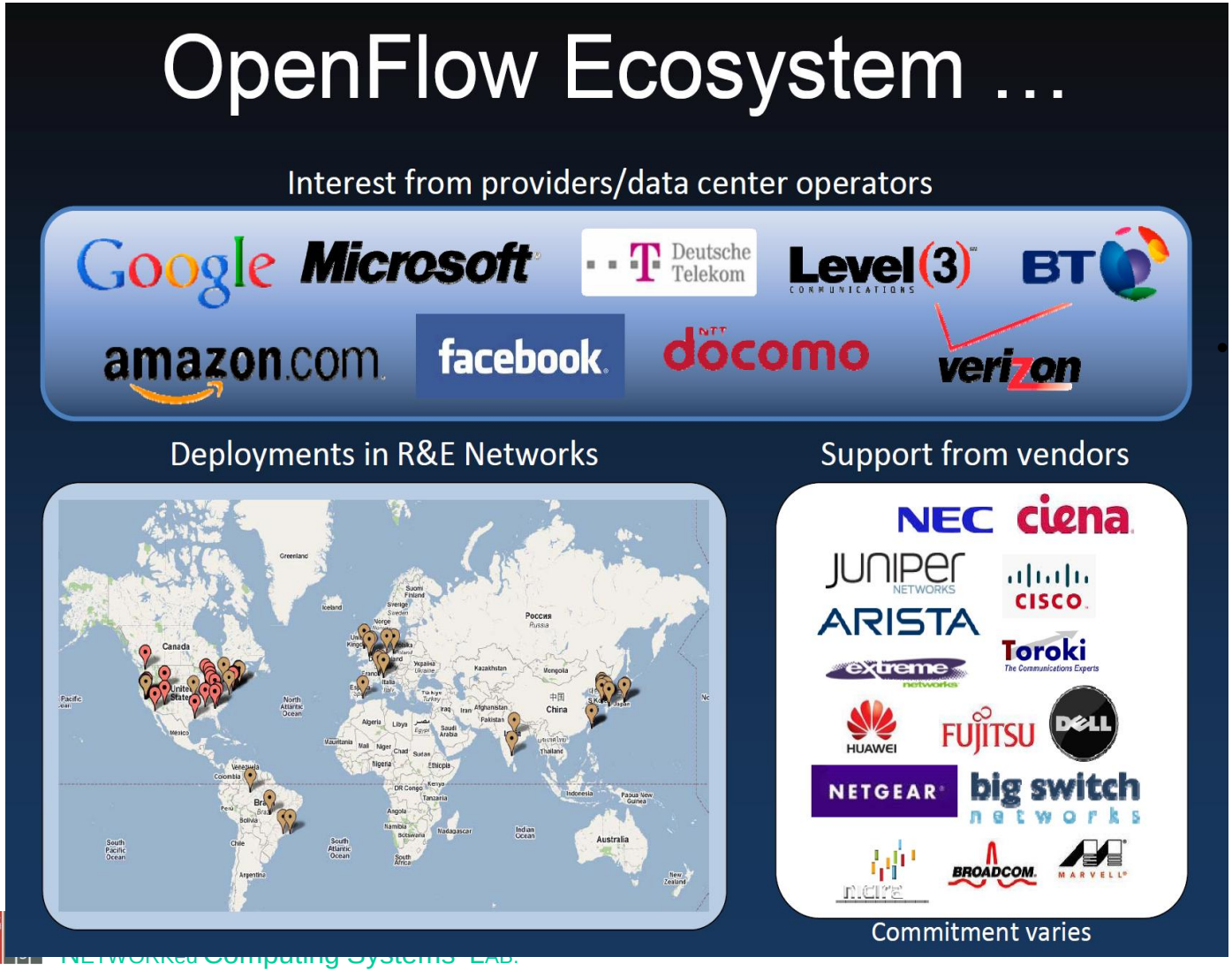


- **ONF's Board of Directors**
  - **Deutsche Tele.**
  - **Facebook**
  - **Google**
  - **Microsoft**
  - **Verizon**
  - **Yahoo!**
- A nonprofit organization dedicated to promote Software-Defined Networking (SDN) ➔ Through simplified smart management, OpenFlow seeks to improve network functionality while lowering the cost associated with operating networks.

# OpenFlow: Enable Innovations "within" the Infrastructure

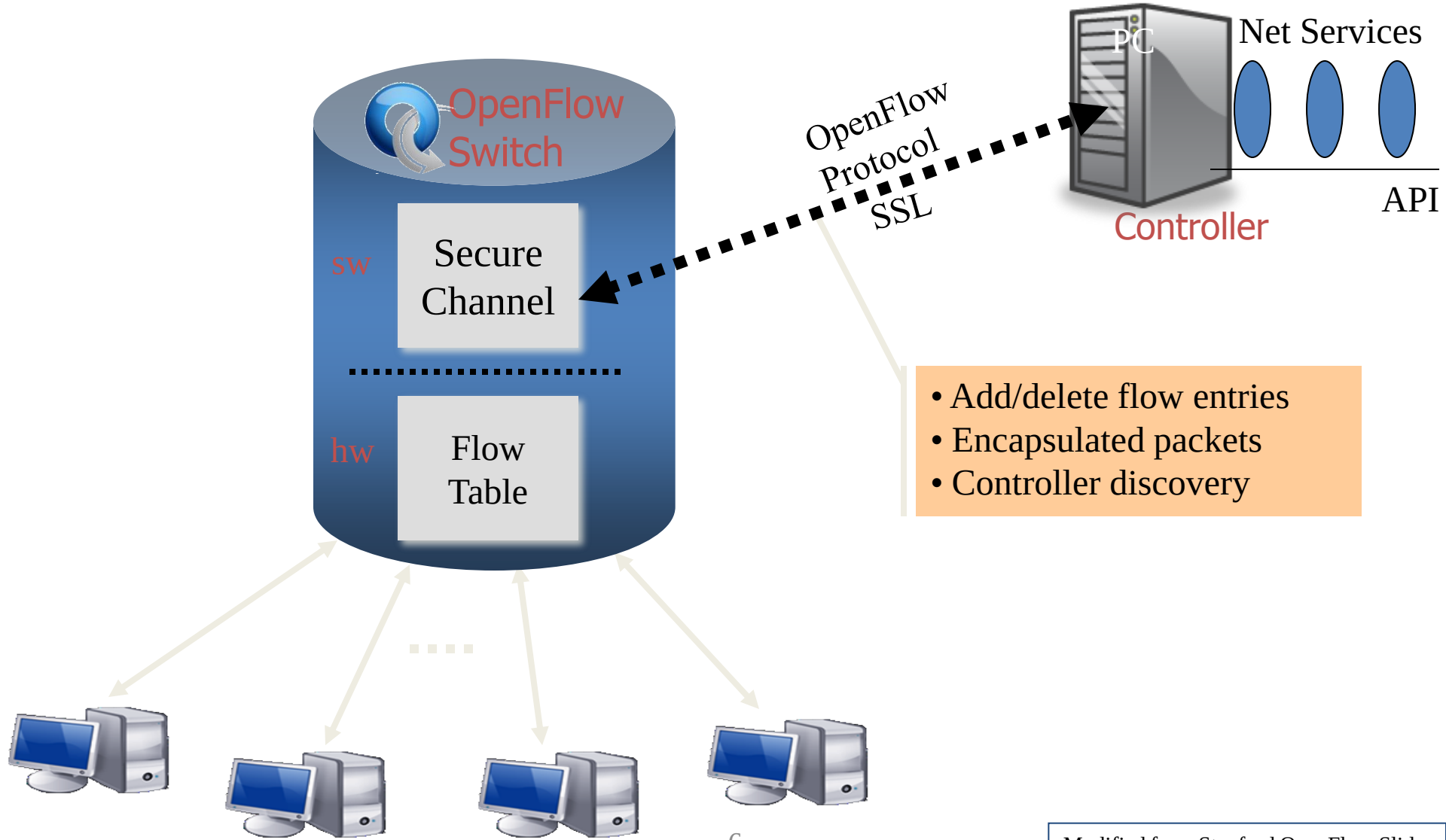


- Add/delete flow entries
- Encapsulated packets
- Controller discovery



Modified from Stanford OpenFlow Slides

# OpenFlow-based SDN Targets

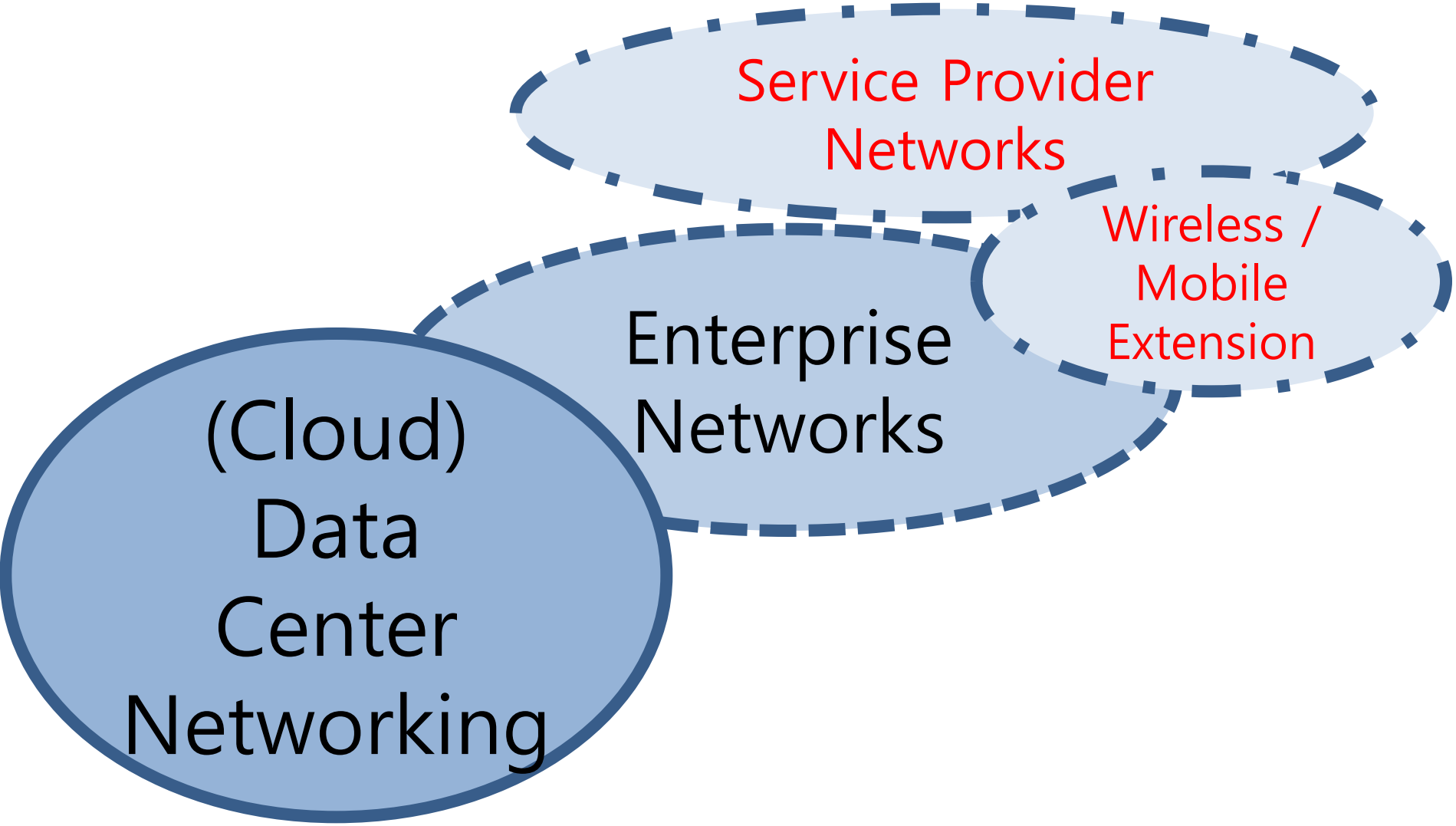

# Initial Buildup of OF@KOREA

# (FIF Testbed WG)

# OpenFlow @ Korea Initiative
# (FIF Testbed Workgroup, Spring 2011~)

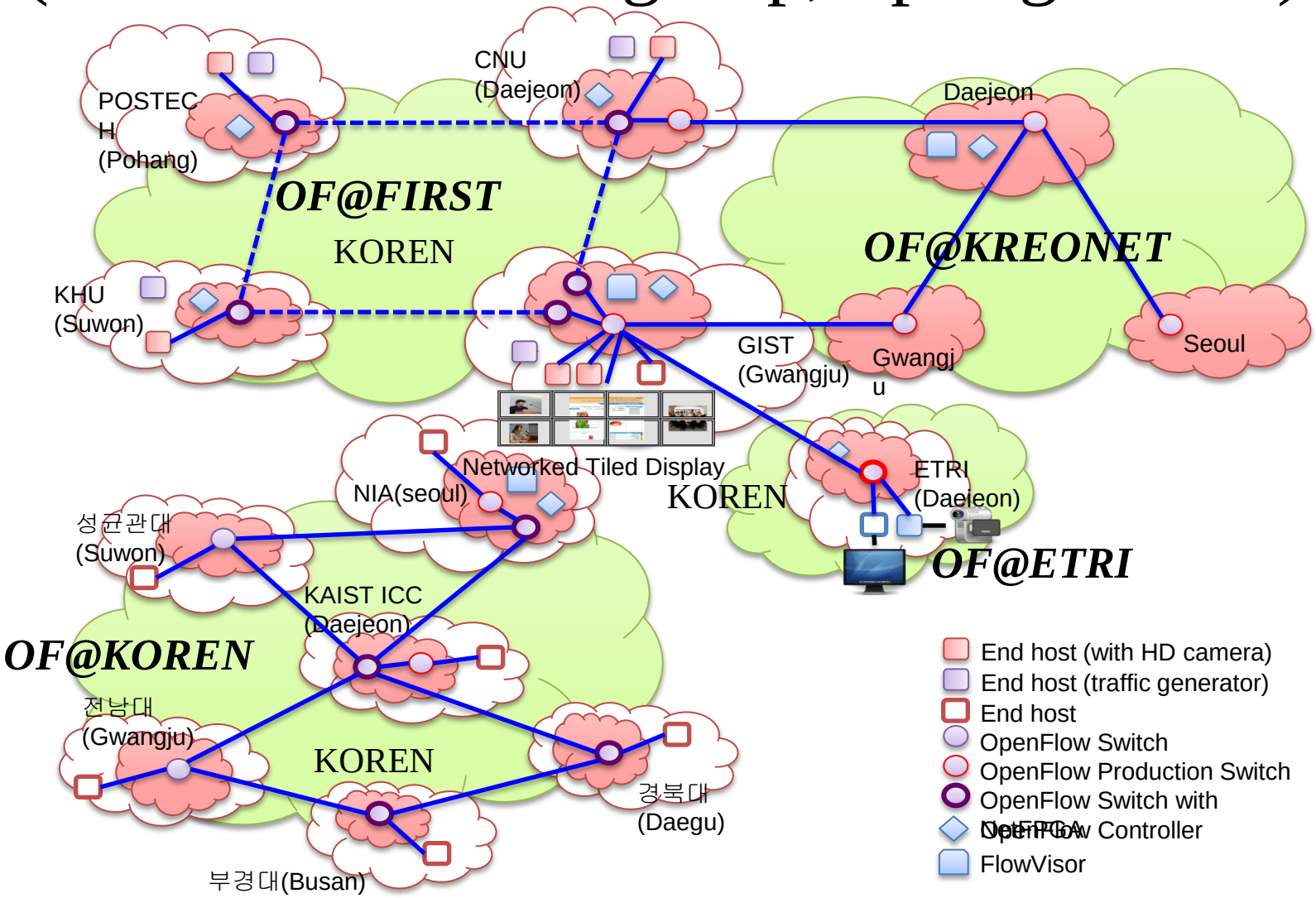

# OF@KOREA Integration (Fall 2011)

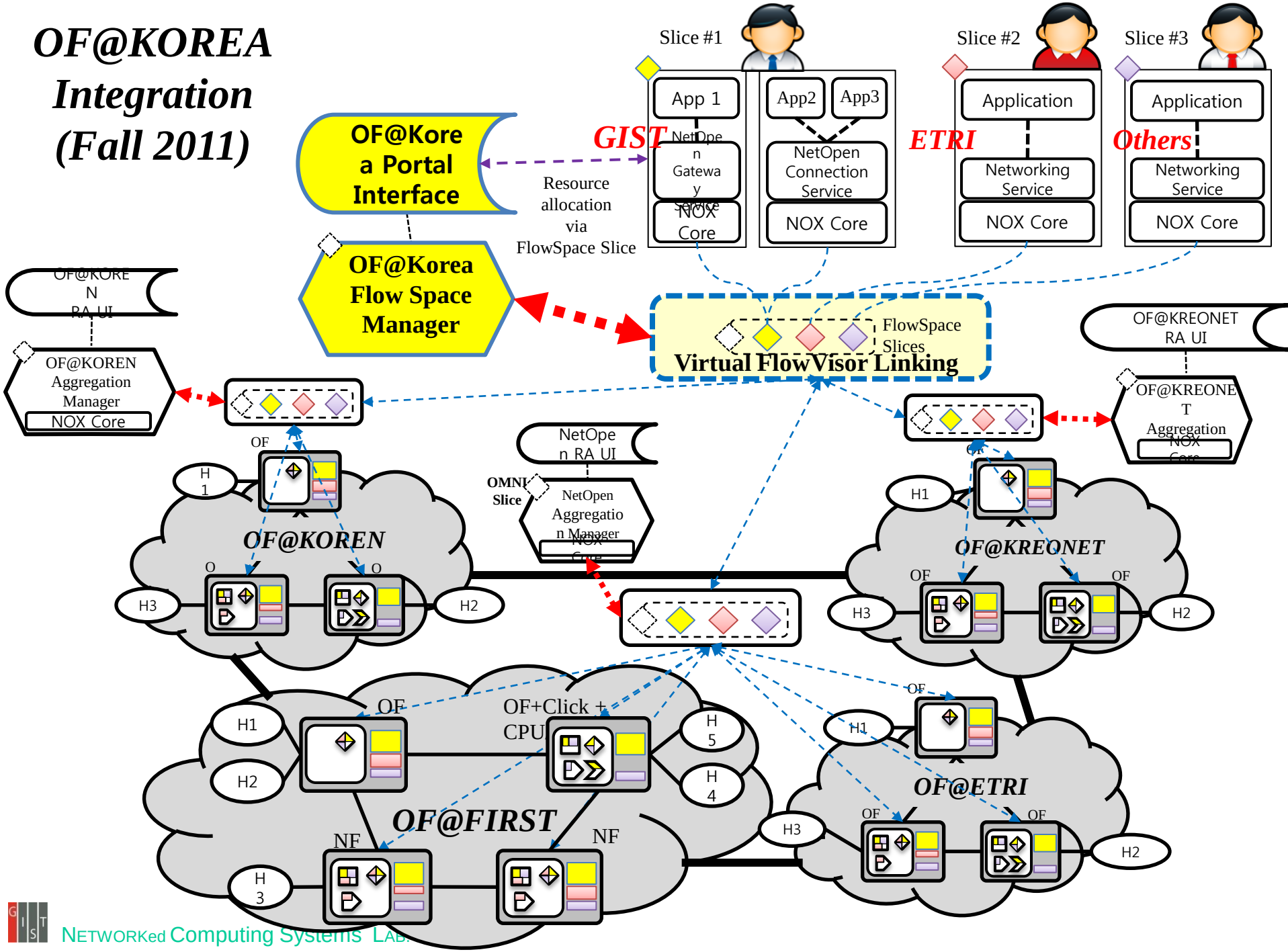

# FIRST@PC Integrated Testbed (~2011)

## (NetOpen RA v0.3 + MediaXCloud RA v0.2 + OMX Service Control v0.3 + OpenCF O&M v0.0)

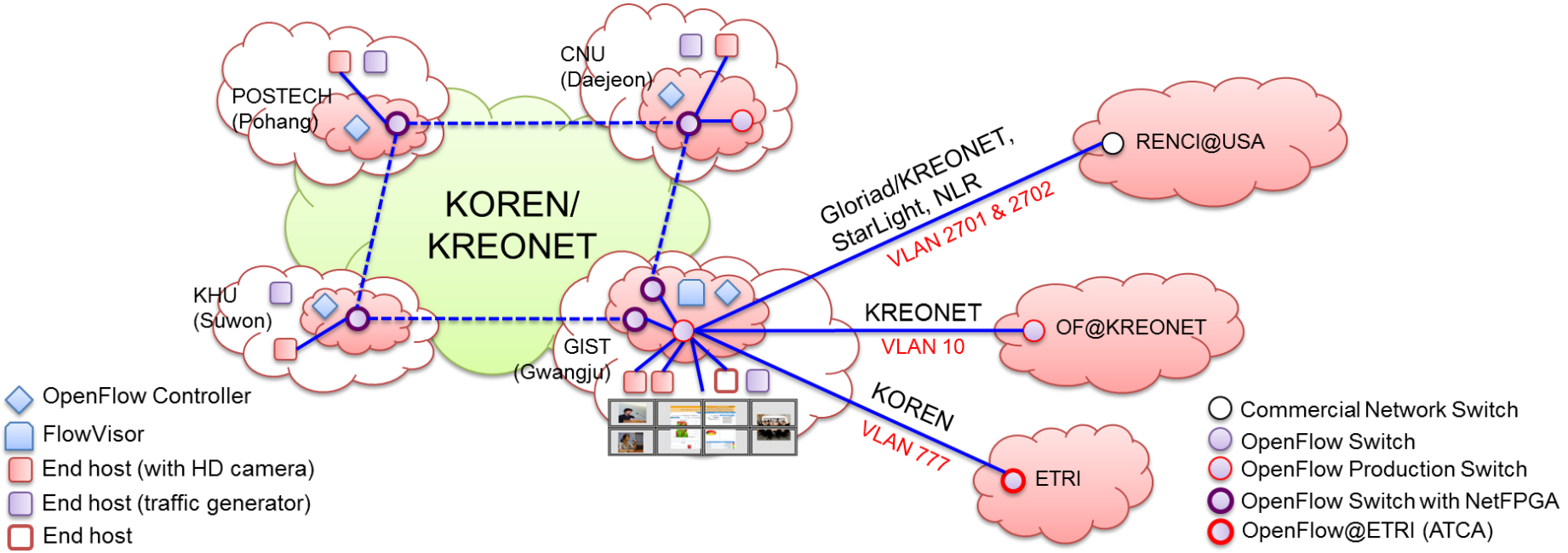


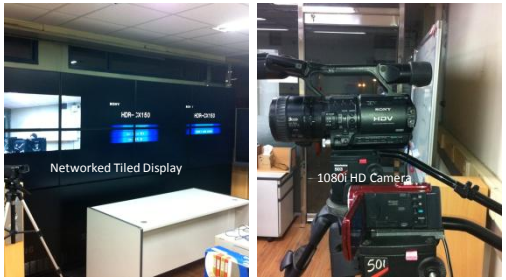


MediaX RA: Display nodes, Camera

NetOpen RA: Switche nodes

MediaX RA: Media Processing nodes

# FIRST@PC Platform Design (v0.9r6)

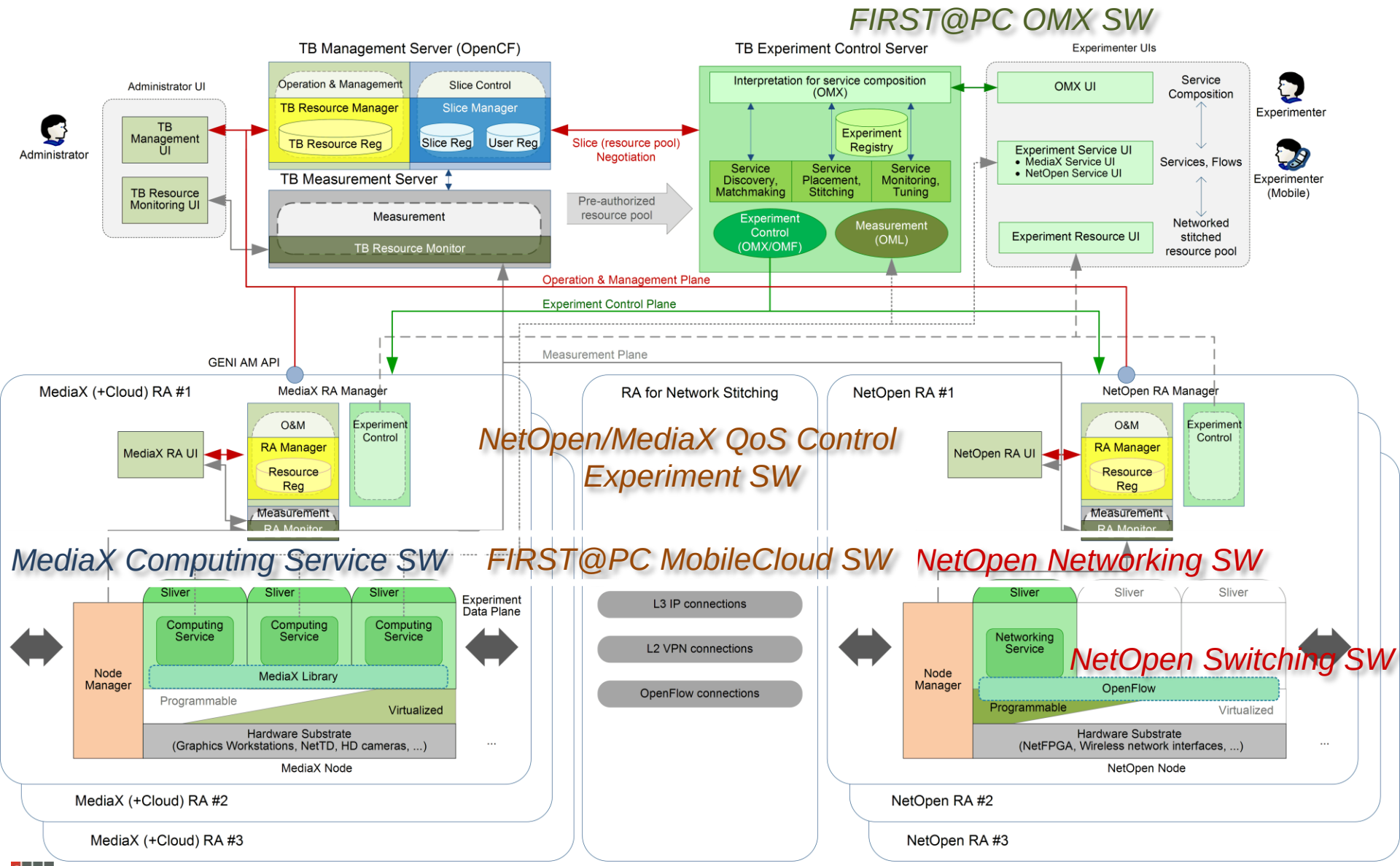

# OpenFlow@Korea Open Networking Summit Demo (Stanford Univ., Oct. 2011)

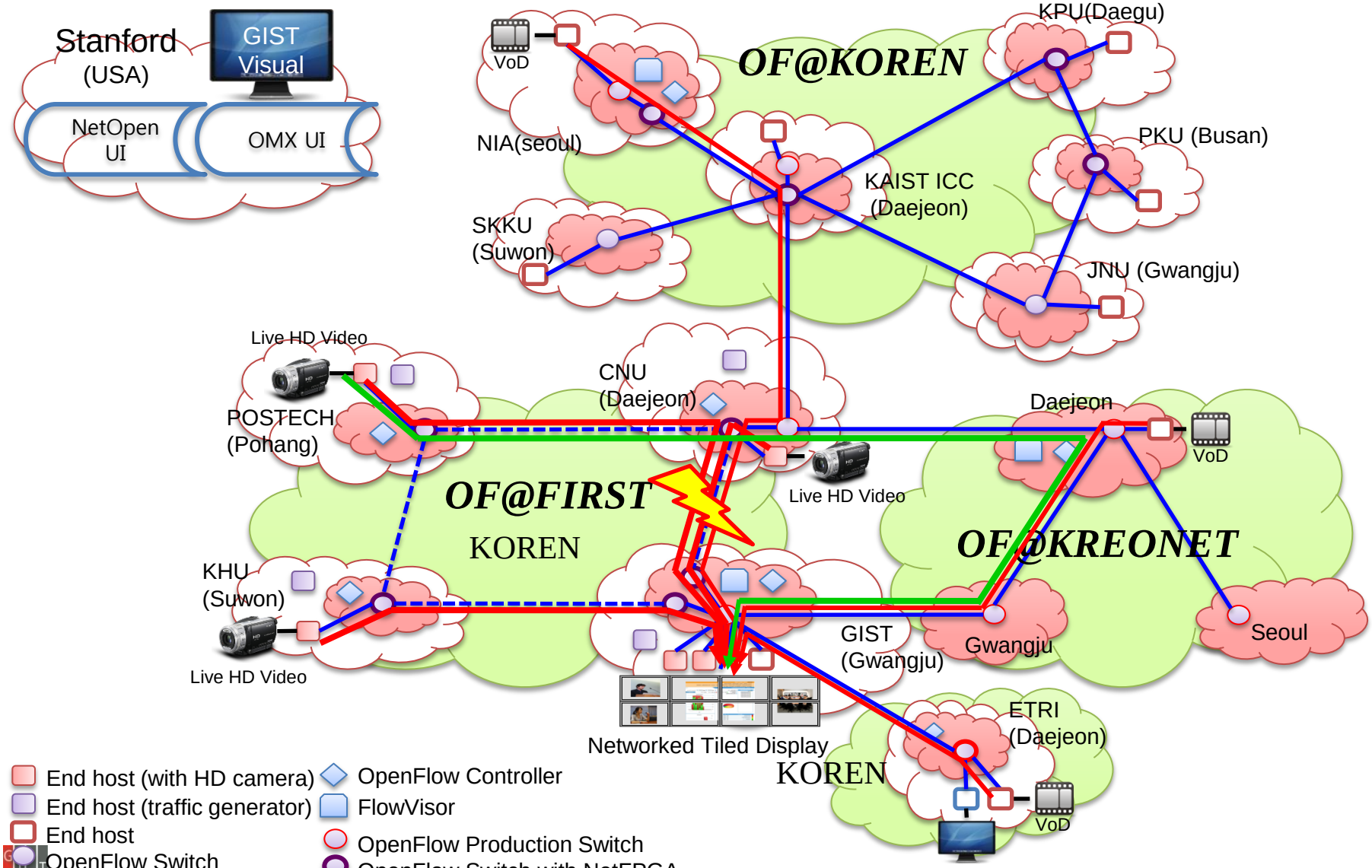

# OpenFlow@Korea Open Networking Summit Demo (Cont.) (Oct. 2011)

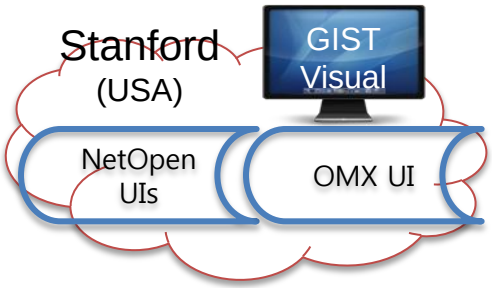


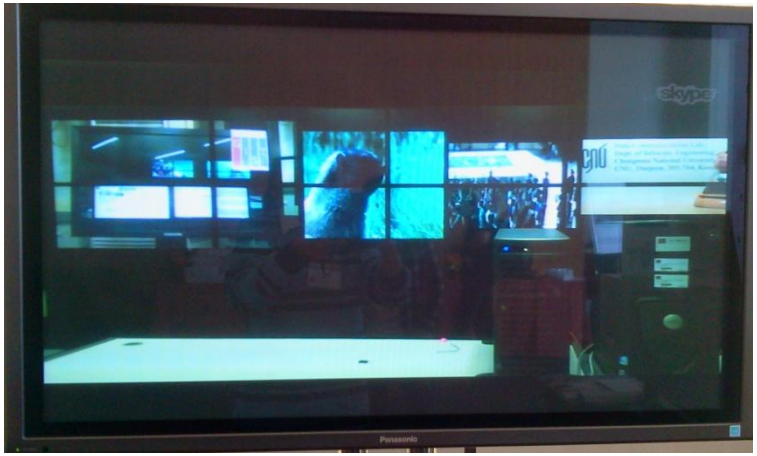

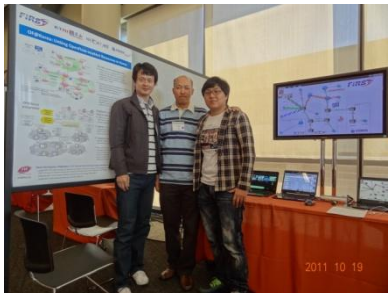

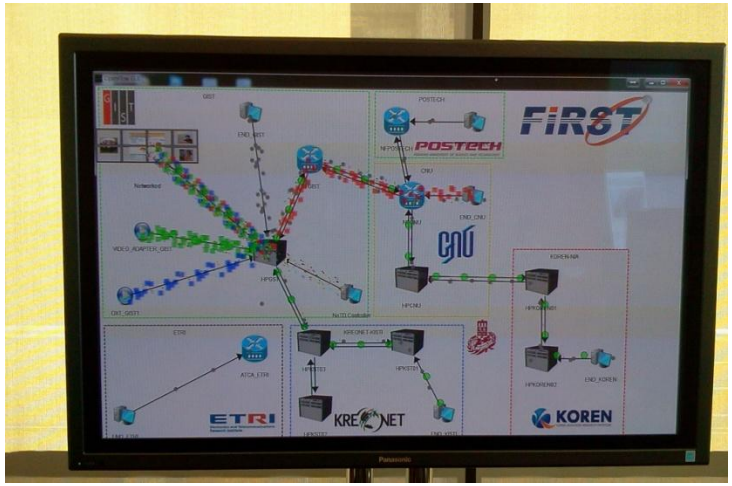


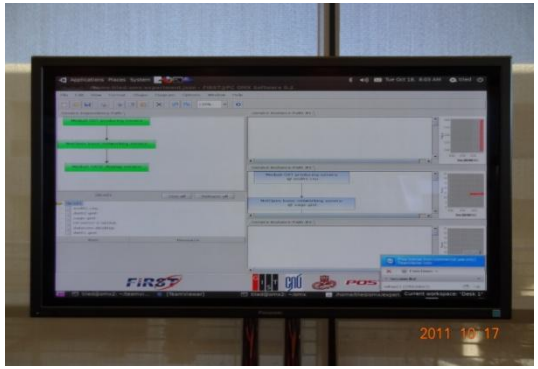

# GFI Week Demo. (Dec. 1-2, 2011)

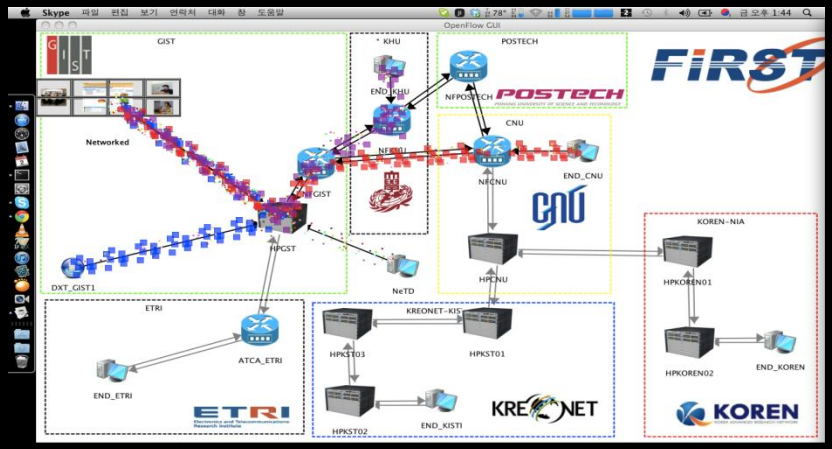


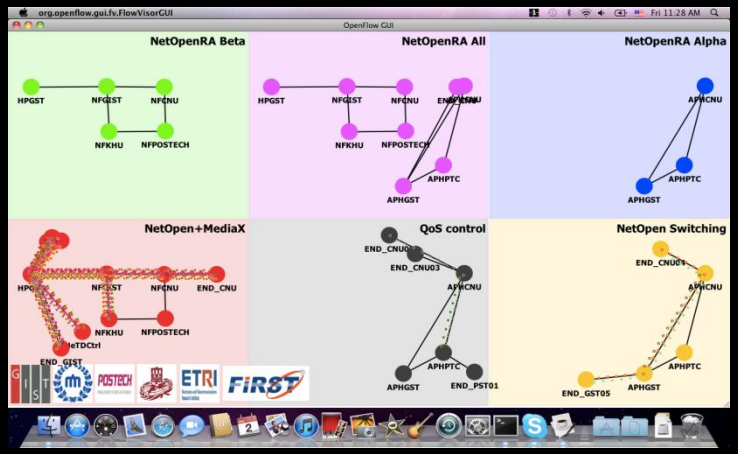


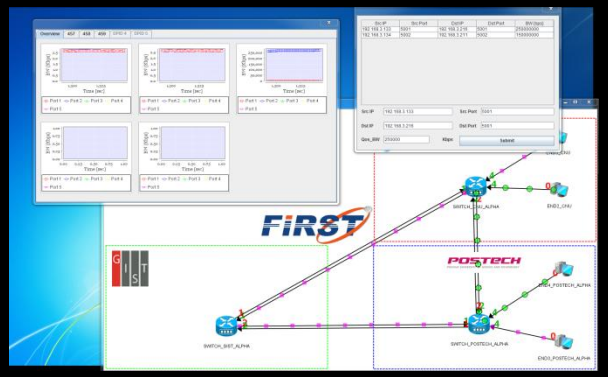

# Expansion toward OF@TEIN

# OF@TEIN Infrastructure (2012~2013)

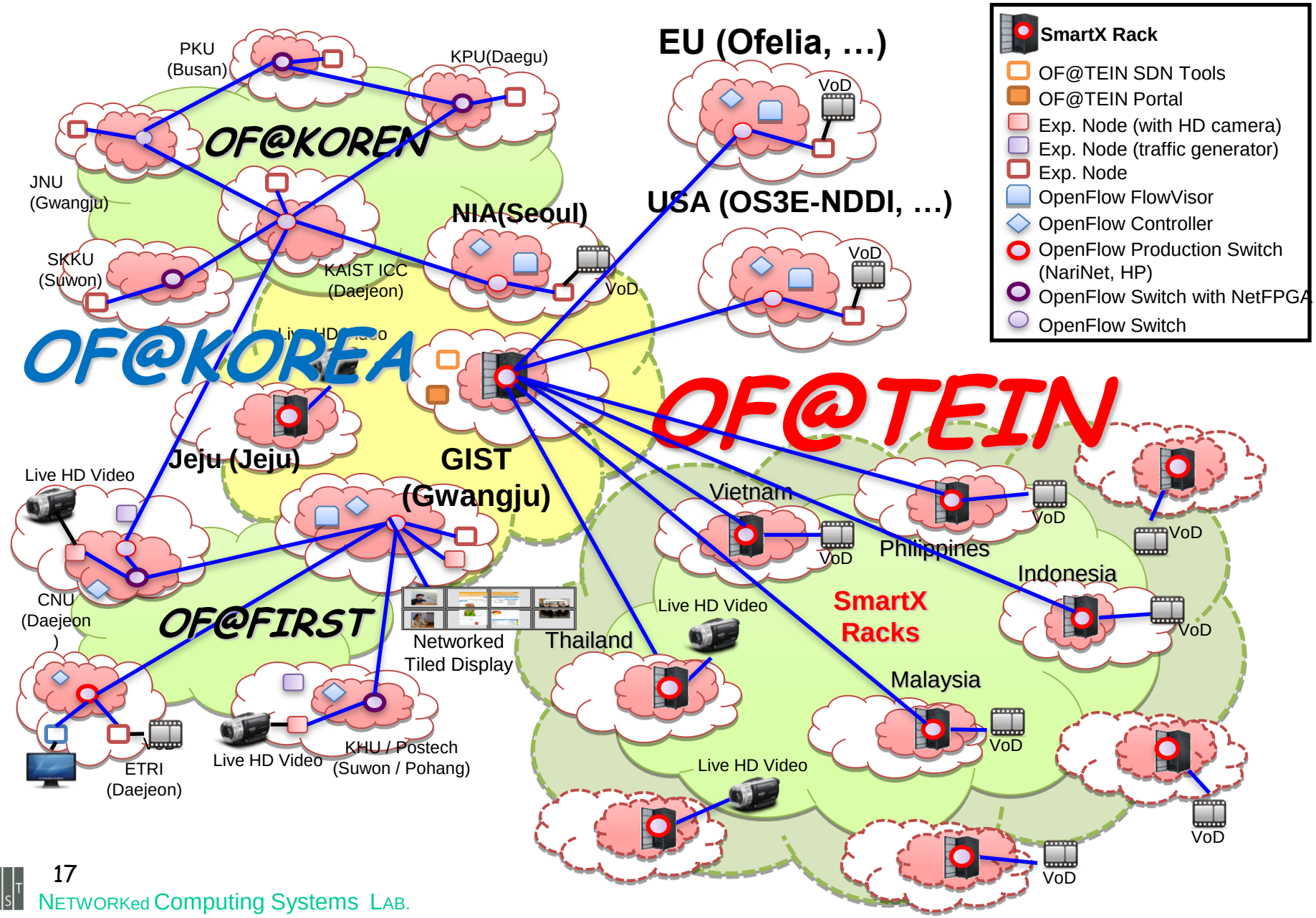

# SmartX Rack (Type A & Type B)

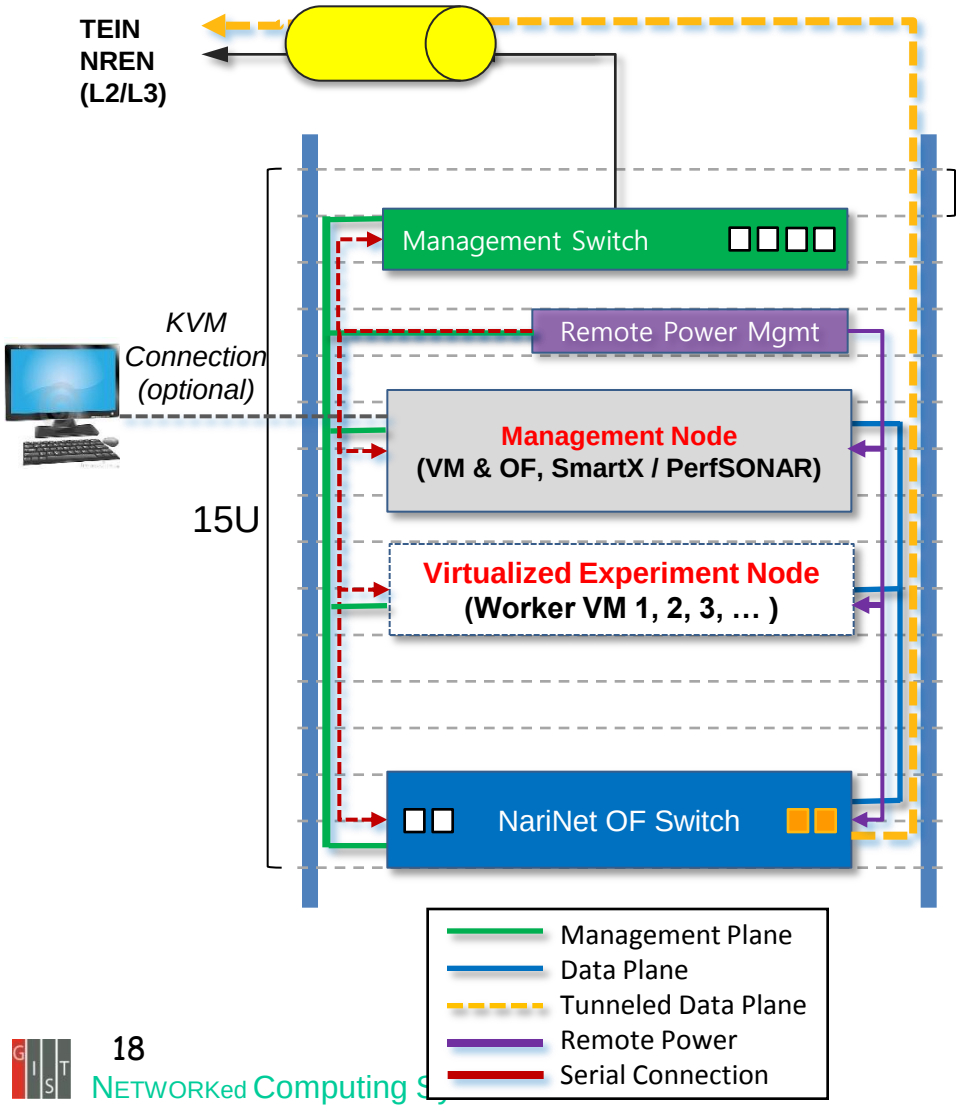


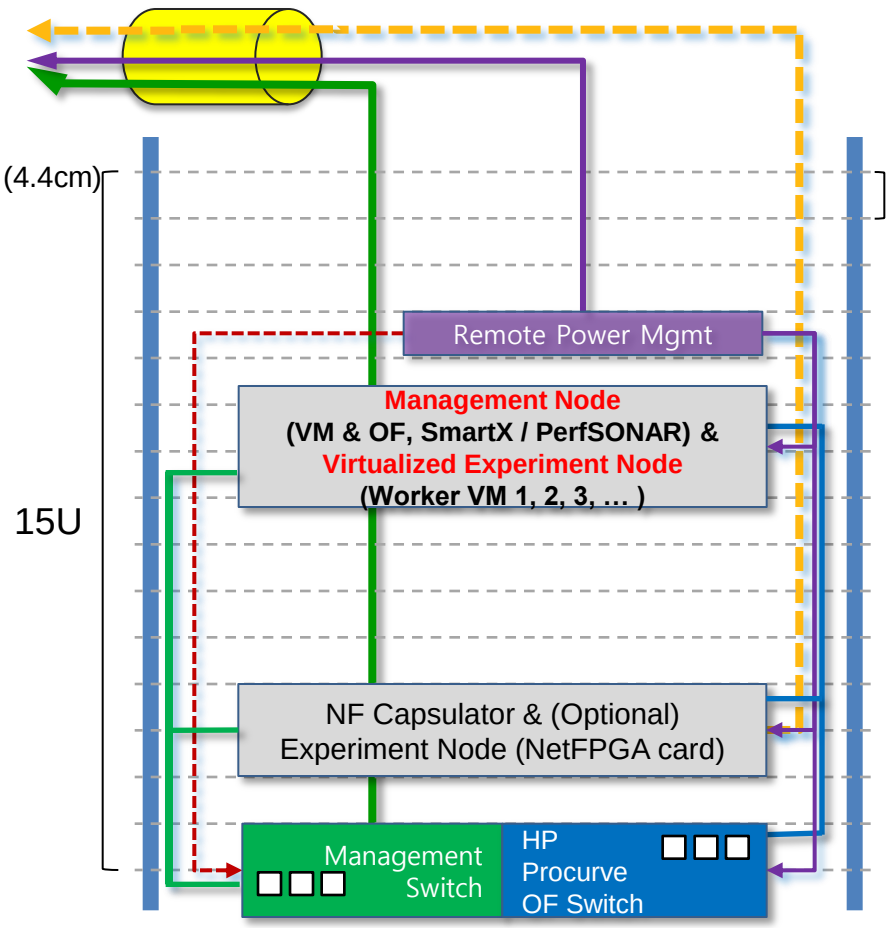

# SmartX Rack Prototype (Type B)

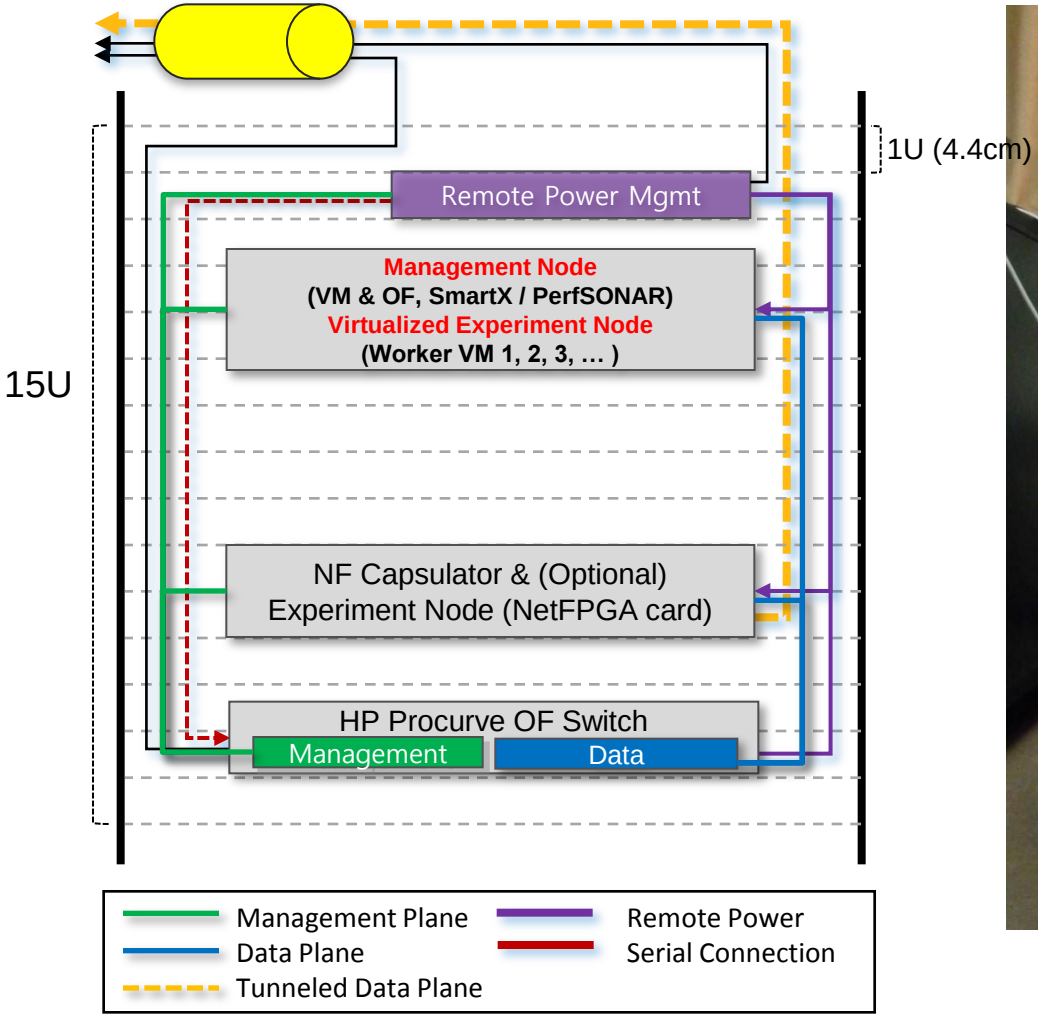


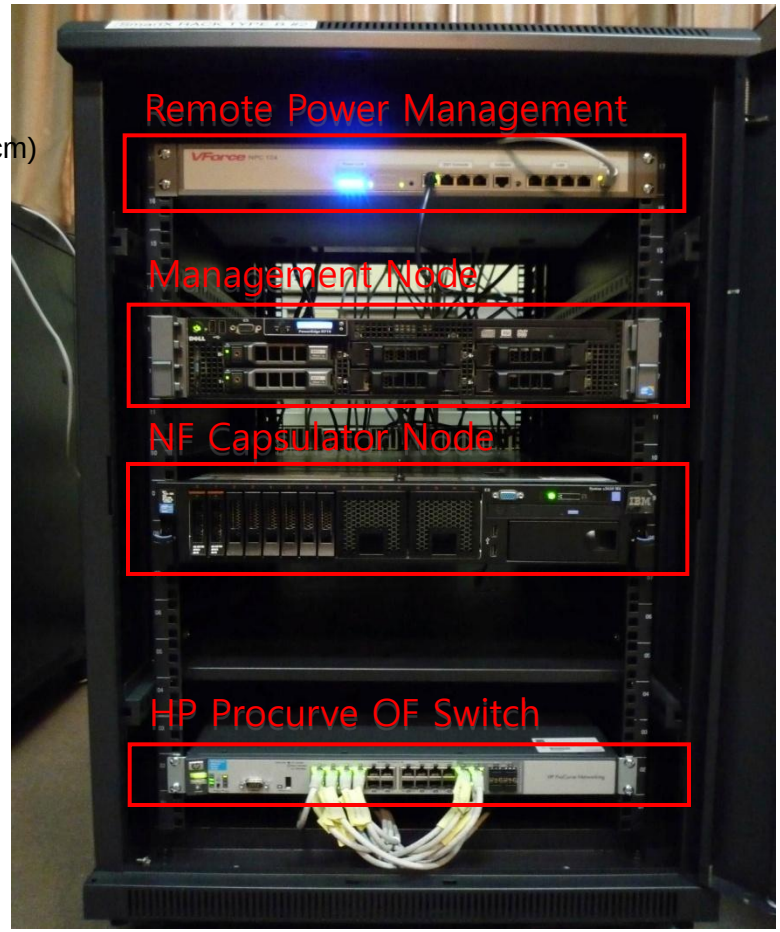

# InstaGENI Rack & ExoGENI Rack

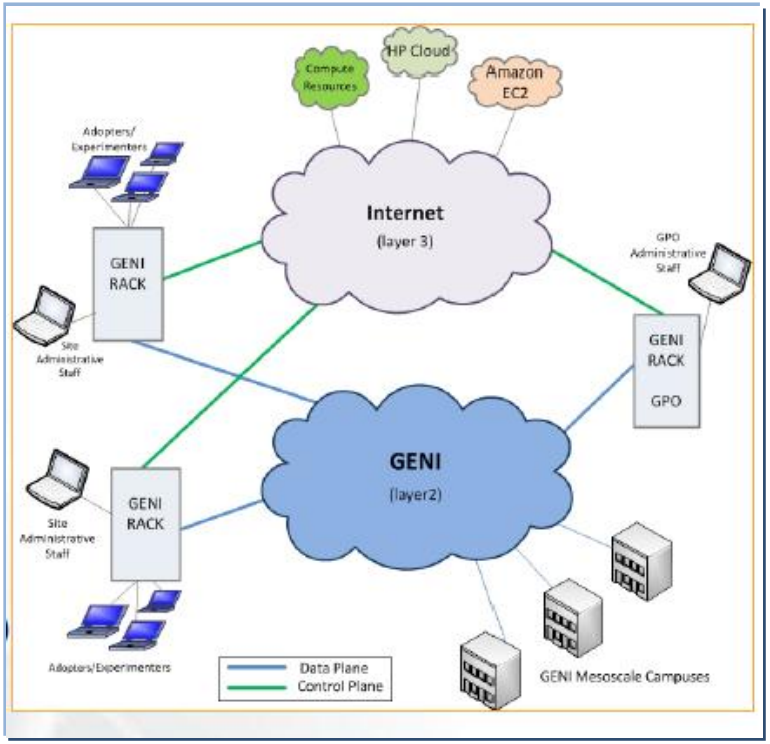


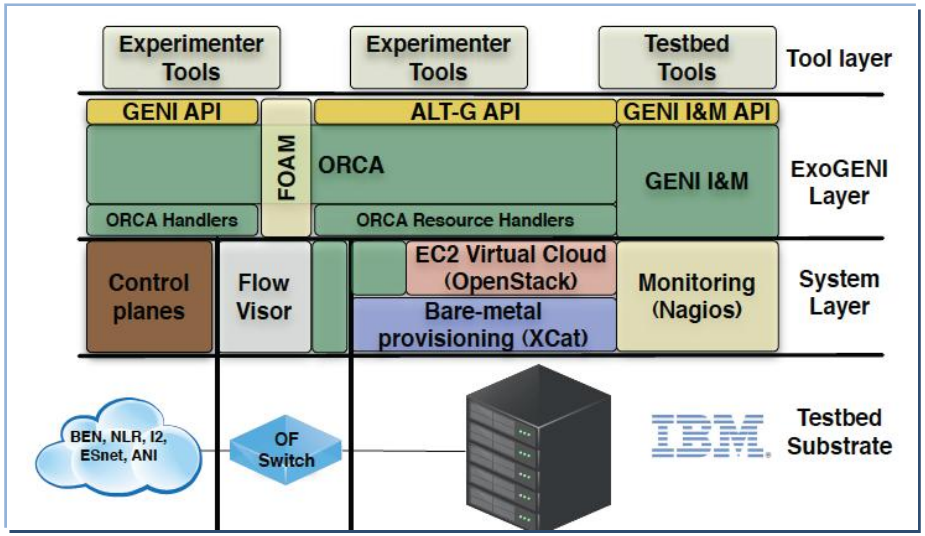


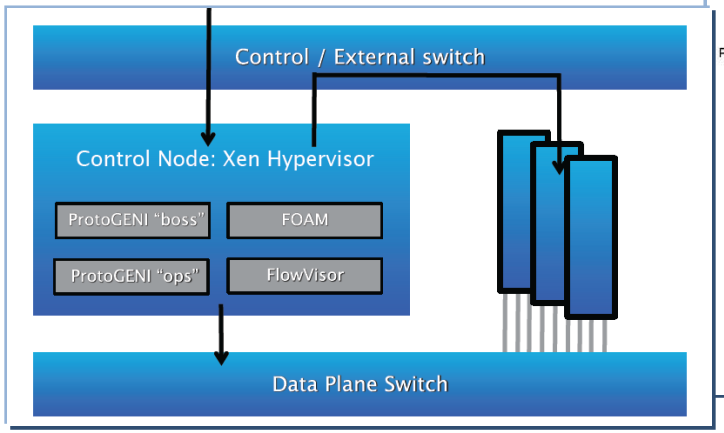


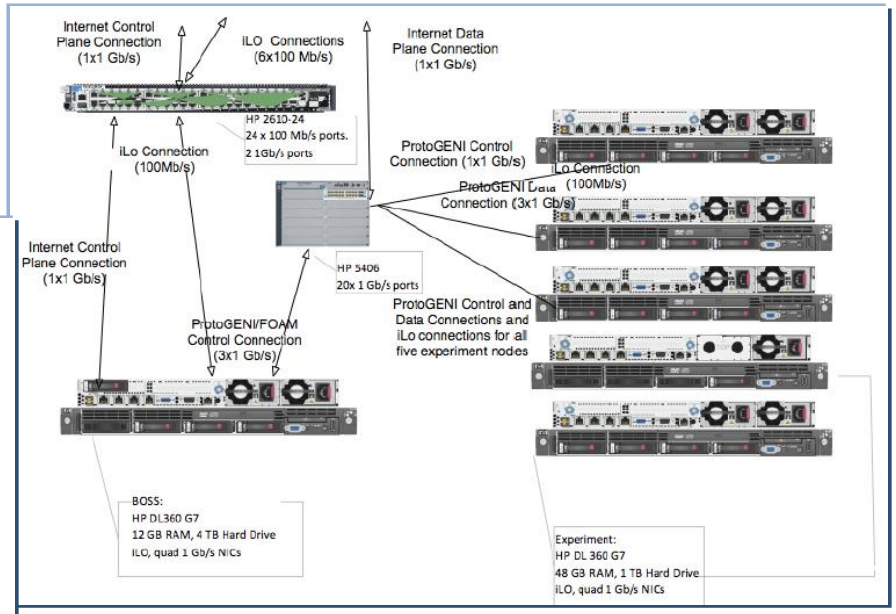

# Interconnecting SmartX Racks for OF@TEIN

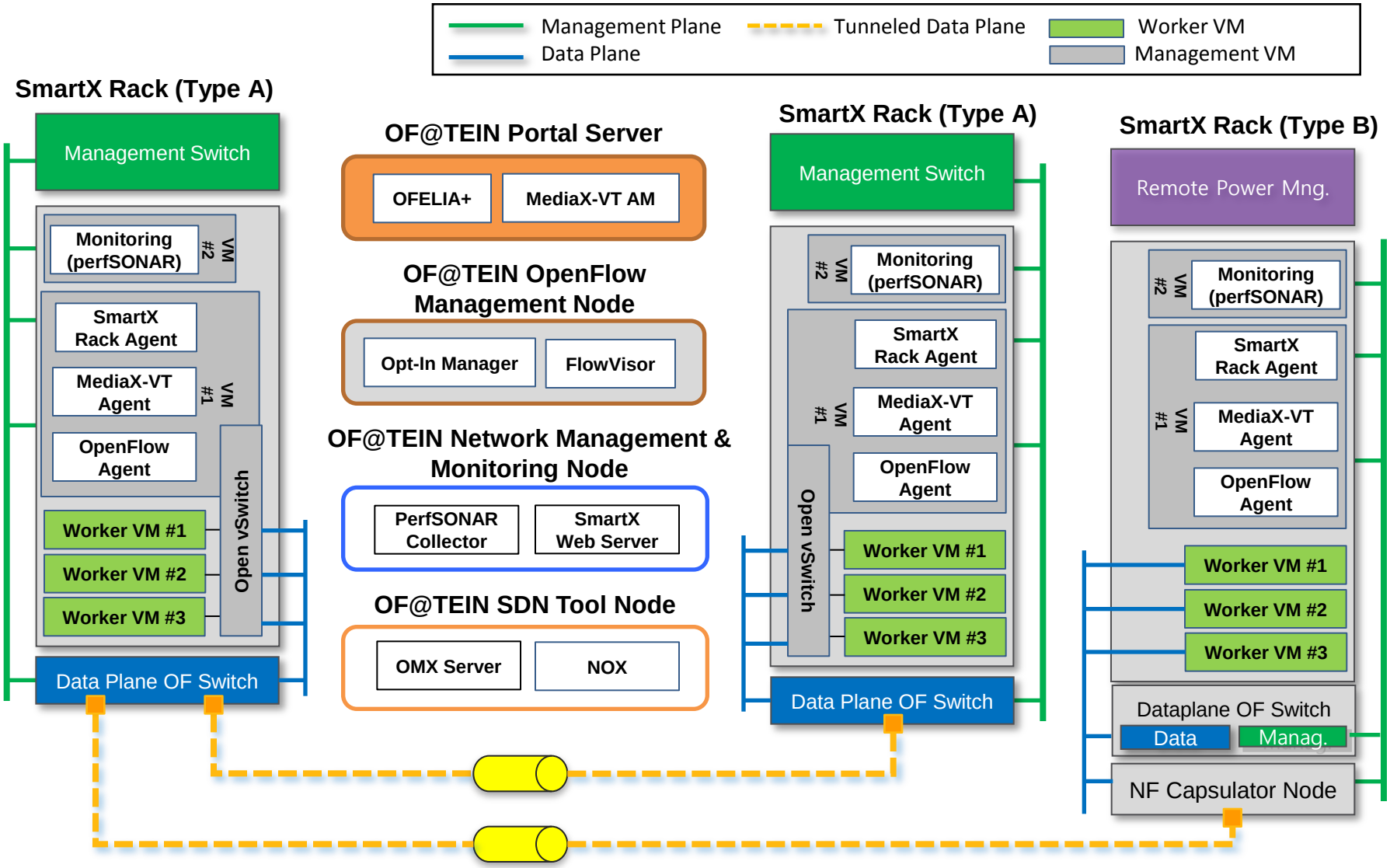

# L2-GRE Connectivity for OF-supported VMs among SmartX Racks (OVS Option)

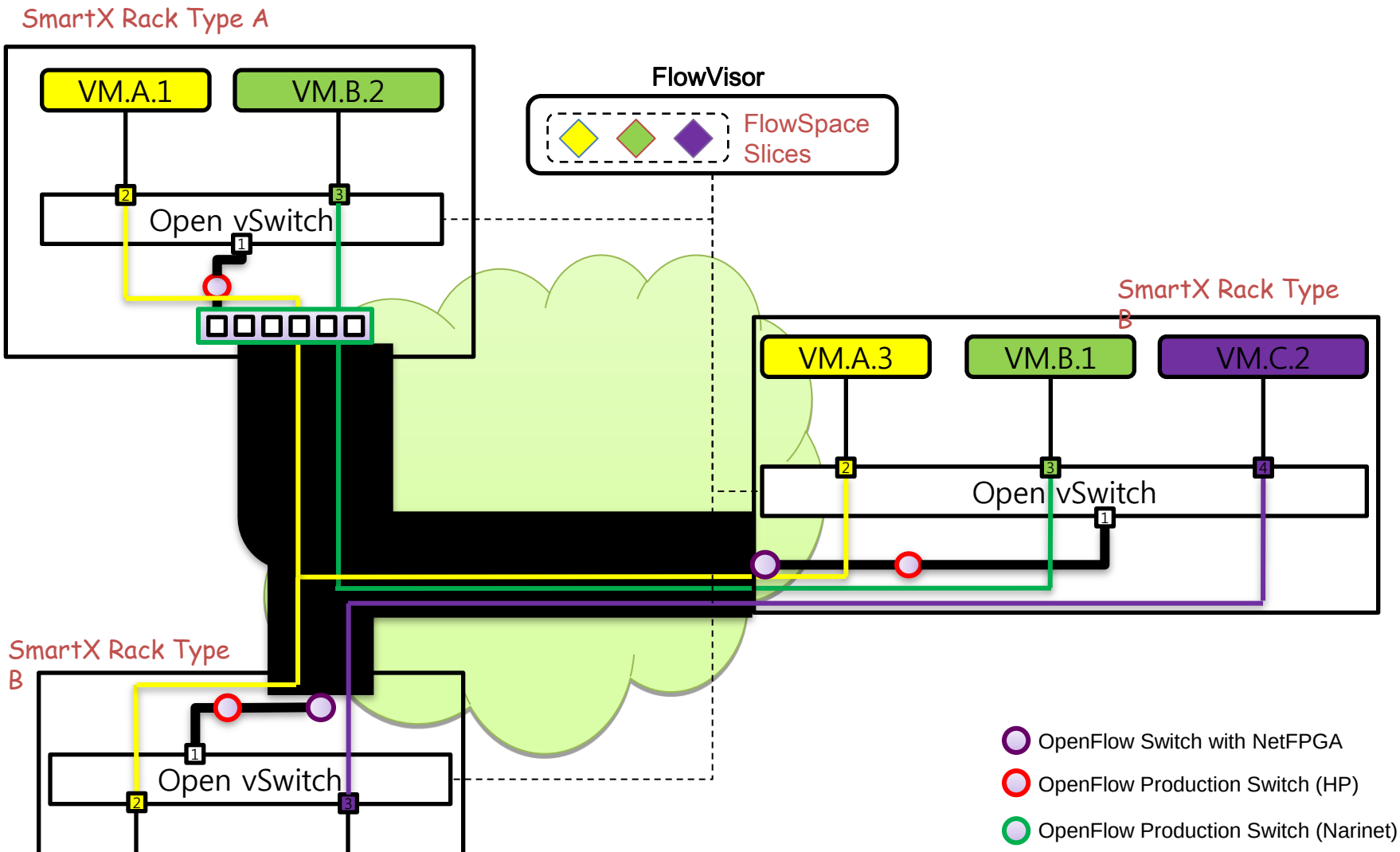

# OF@TEIN SDN Tools

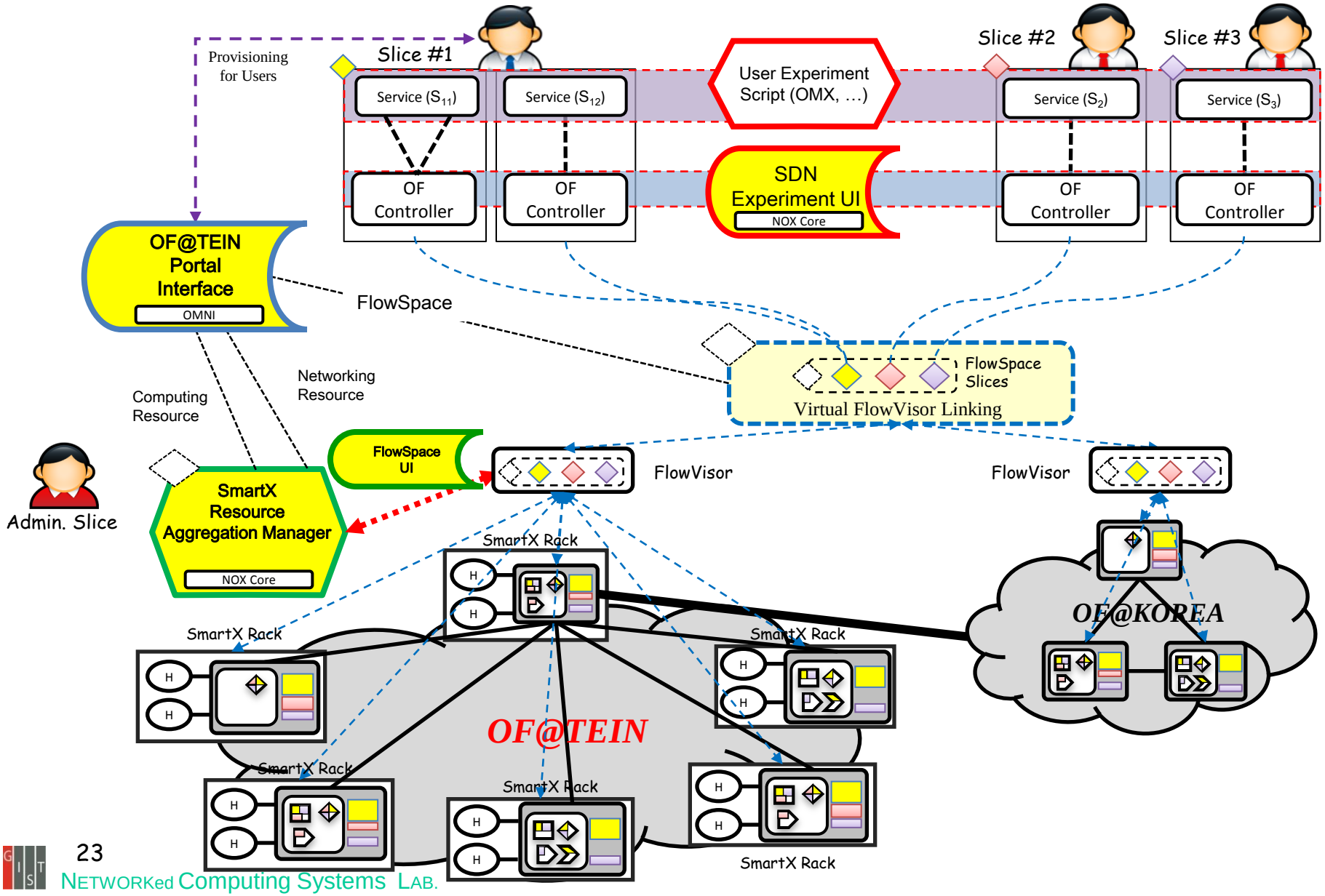

# FlowSpace Management for OF-enabled SDN

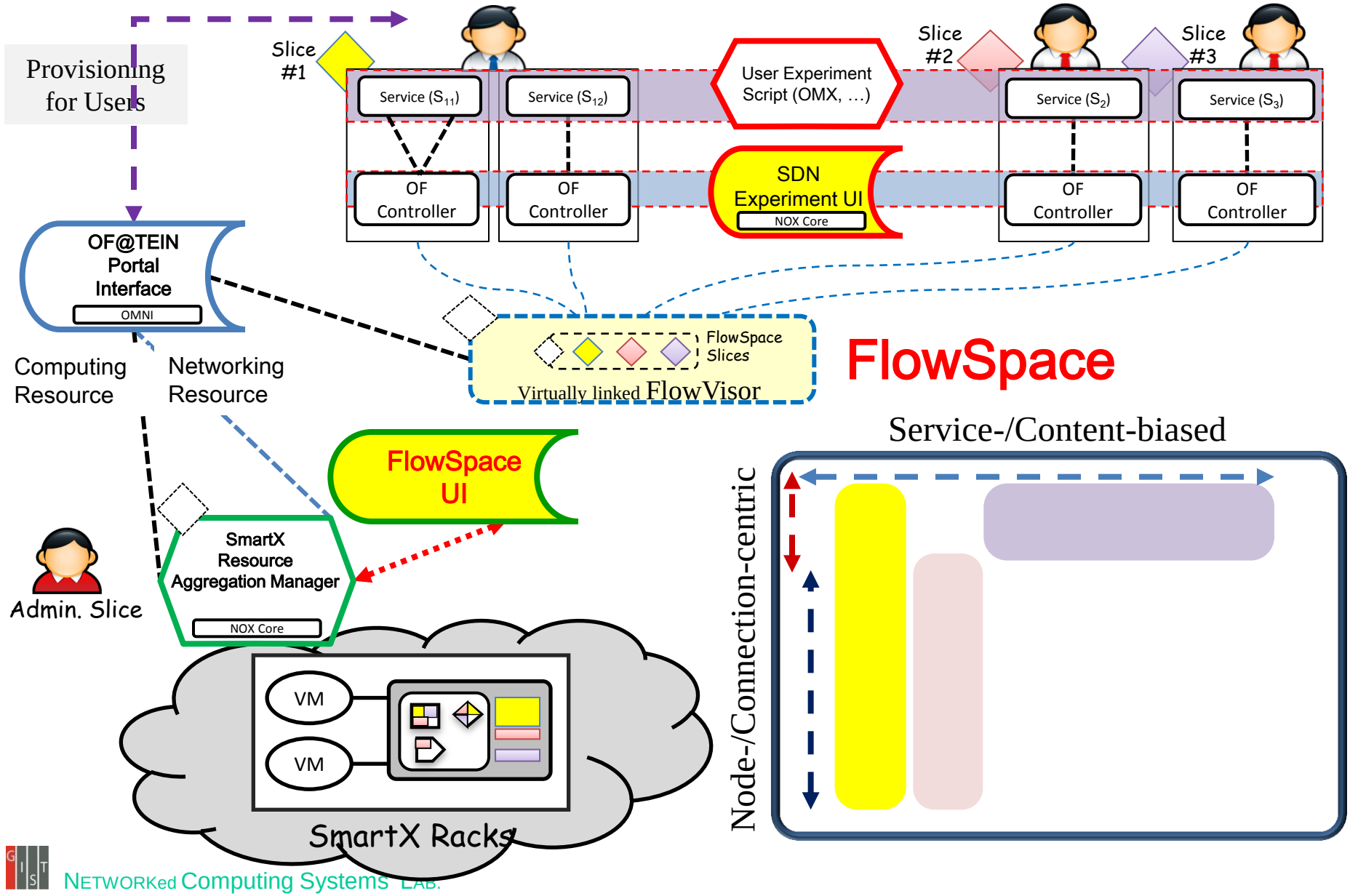

# OF-based SDN Collaboration Candidates

- OF@Korea; Virtual Router Platforms (Korea U's Xebra, ETRI's FIRST, KAIST PacketShader, …); Yonsei U's SDN tools, …

- OFELIA: Linking Europe, via TEIN3/4 ➔ FIRE EU-KR, Fed4FIRE
- iGENI & OpenFlow: iGENI participant's OF, via GLORIAD & StarLight

- NDDI & OS3E: Internet2 participant's OF, via TransPAC3 + CJK connection? Network Development and Deployment Initiative (NDDI) and the Open Science, Scholarship and Services Exchange (OS3E)
- (TBD) Japan: OF@APII ???
- (TBD) China

Gwangju Institute of
Science & Technology

# Thank you!

Send Inquiry to jongwon@gist.ac.kr

http://nm.gist.ac.kr